Digital input board, optically isolated, 32 digital inputs, 5 V

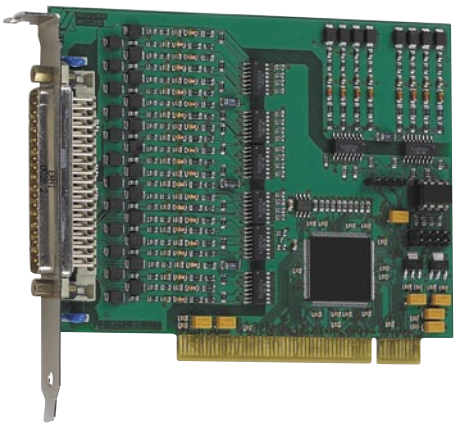

APCI-1032-5

32 digital inputs, 5 V,
including 16 interruptible inputs

Optical isolation 1000 V

Input filters

Reverse voltage protection

RoHS 2002/95/EC

PCI 32-bit

LabVIEW™

LabWindows/CVI™

DIAdem

Features

- 32 optically isolated digital inputs, 5 V, including 16 interruptible inputs

Safety features

- Optical isolation 1000 V
- Creeping distance IEC 61010-1
- Reverse voltage protection
- All inputs are filtered
- Protection against fast transients (burst), overvoltage, electrostatic discharge and high-frequency EMI
- Additional noise suppression on the interrupt lines

Applications

- Industrial I/O control
- Signal switching
- Interface to electromechanical relays
- Automatic test equipment
- ON/OFF monitoring of motors, lights...
- Machine interfacing
- ...

Protective circuit for the input channels

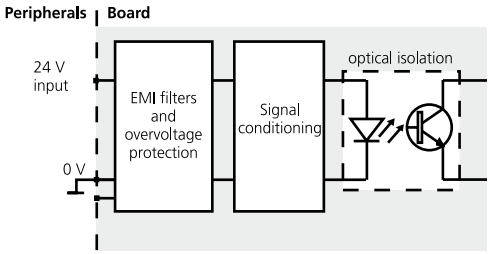

Software drivers

A CD-ROM with the following software and programming samples is supplied with the board.

Standard drivers for:

- Linux
- 32-bit drivers for Windows 8 / 7 / Vista / XP / 2000
- Signed 64-bit drivers for Windows 8 / 7 / XP
- Real-time use with Linux and Windows on request
- RTX drivers (real-time)

Drivers and samples for the following compilers and software packages:

- .NET
- Microsoft VC++ • Borland C++
- Visual Basic • Delphi
- LabVIEW • LabWindows/CVI • DIAdem

ADDIPACK functions:

Digital input

On request:

Further operating systems, compilers and samples.

Driver download: www.addi-data.com/downloads

Phone: +49 7229 1847-0 info@addi-data.com
Fax: +49 7229 1847-222 www.addi-data.com

ADDI-DATA®
SPIRIT OF EXCELLENCE

Specifications

Digital inputs

Number of inputs:	32
Optical isolation:	through opto-couplers, 1000 V from PC to peripherals
Interruptible inputs:	16 (input 0 to 15)
Interrupt compare logic:	AND and OR mode
Nominal voltage:	5 V
Input current at U nominal:	6 mA typ.
Logic input levels:	U nominal: 5 V
UH max.:	6 V/8.4 mA typ
UH min.:	4 V/4 mA typ.
UL max.:	2 V/0.7 mA typ.
UL min. at nominal voltage:	0 V/current 0 mA typ.
Signal delay:	70 µs
Maximal input frequency:	5 kHz at nominal voltage

EMC – Electromagnetic compatibility

The product complies with the European EMC directive. The tests were carried out by a certified EMC laboratory in accordance with the norm from the EN 61326 series (IEC 61326). The limit values as set out by the European EMC directive for an industrial environment are complied with. The respective EMC test report is available on request.

Physical and environmental conditions

Dimensions:	131 x 99 mm
System bus:	PCI 32-bit 5 V acc. to specification 2.1 (PCISIG)
Space required:	1 PCI slot
Operating voltage:	+5 V, ± 5 % from the PC
Max. current consumption:	(+5 V from the PC) 140 mA ± 10 %
Front connector:	37-pin D-Sub male connector
Temperature range:	0 to 60 °C (with forced cooling)

Simplified block diagram

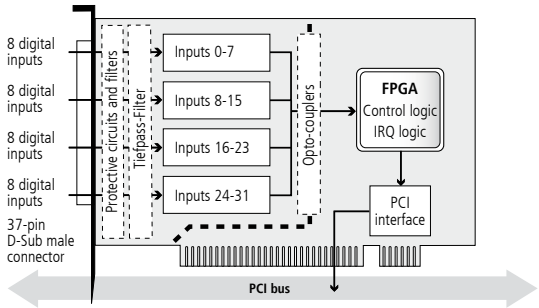

Pin assignment – 37-pin D-Sub male connector

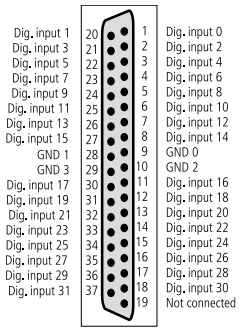

APCI-1032
Screw terminal panels PX9000 and PX901-DG
with cable ST010

ADDI-DATA connection for the APCI-1032

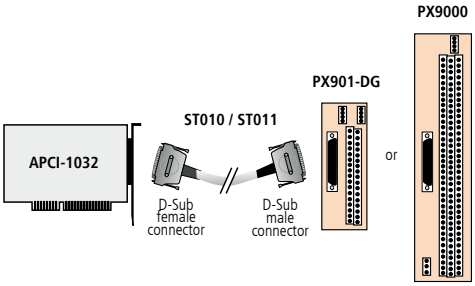

(without illustration: The APCI-1032-5 can only be connected to the PX901-ZG)

Ordering information

APCI-1032-5

APCI-1032-5: Digital input board, optically isolated, 32 digital inputs, 5 V. Incl. technical description and software drivers

Accessories for the APCI-1032-5

PX 901-ZG: Screw terminal panel, for DIN rail
ST010: Standard round cable, shielded, twisted pairs, 2 m
ST011: Standard round cable, shielded, twisted pairs, 5 m

Phone: +49 7229 1847-0 info@addi-data.com
Fax: +49 7229 1847-222 www.addi-data.com